70447-0B CL 100 LINK

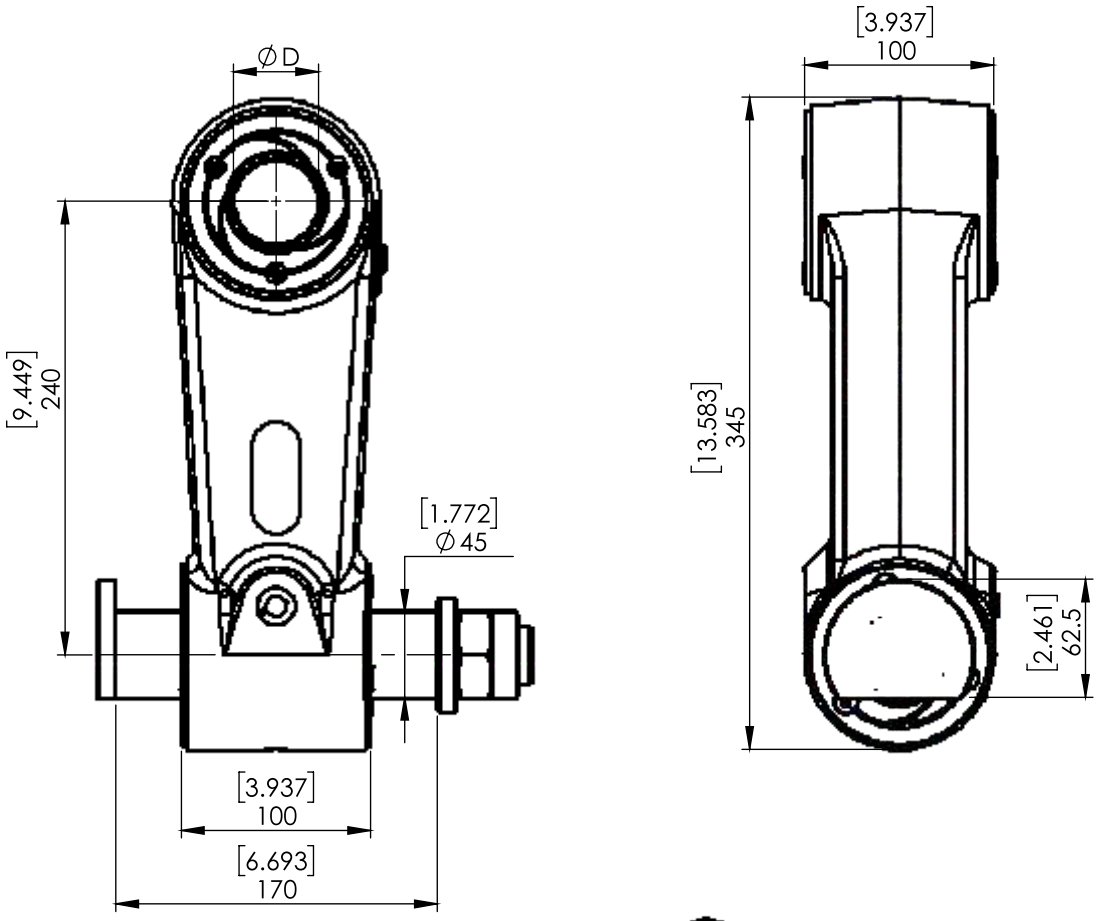

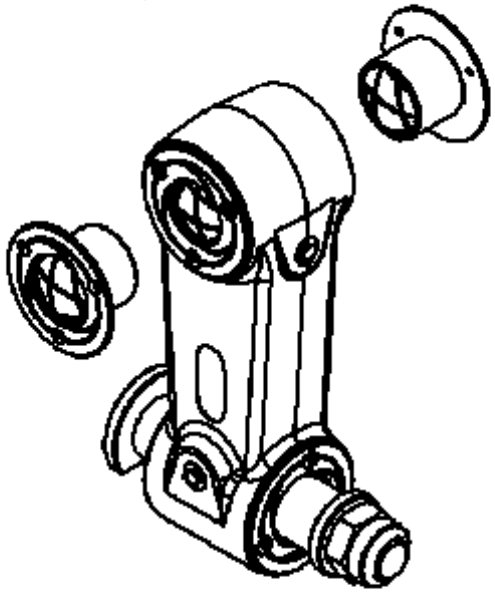

MAX AXIAL LOAD STATIC [KN/lbf]	160	35969
MAX AXIAL LOAD DYNAMIC [KN/lbf]	80	17985
WEIGHT [kg/lb]	22	49

Order no	Item name	Upper connection
70447-0B	LINK CL 100	All kit
70447-0B45	LINK CL 100-45	L 100 D 45
70447-0B50	LINK CL 100-50	L 100 D 50

www.finn-rotor.com
FINN ROTOR